PRESENTATION DE TROIS CAPTEURS DE TEMPERATURE

I LE Capteur LM35 :

II Présentation du capteur de température : DS1822P

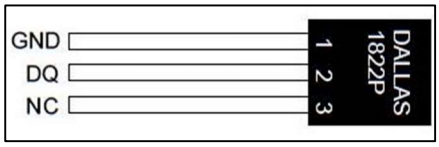

Protocole de sortie :

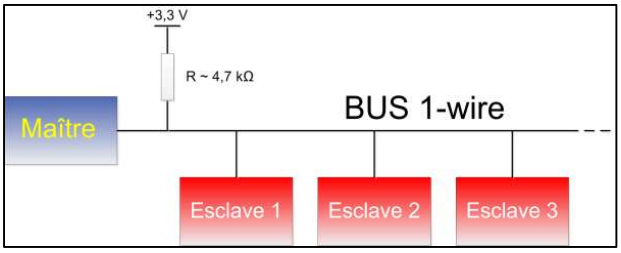

La température est codée sur deux octets, de la manière suivante :

S = SIGN

LS BYTE	**b7**	**b6**	**b5**	**b4**	**b3**	**b2**	**b1**	**b0**
	2^3	2^2	2^1	2^0	2^{-1}	2^{-2}	2^{-3}	2^{-4}
MS BYTE	**b15**	**b14**	**b13**	**b12**	**b11**	**b10**	**b9**	**b8**
	S	S	S	S	S	2^6	2^5	2^4

III Présentation du capteur de température : DS1621

FEATURES

- Temperature measurements require no external components
- Measures temperatures from -55°C to +125°C in 0.5°C increments. Fahrenheit equivalent is -67°F to 257°F in 0.9°F increments
- Temperature is read as a 9-bit value (2-byte transfer)
- Wide power supply range (2.7V to 5.5V)
- Converts temperature to digital word in 1 second
- Thermostatic settings are user definable and nonvolatile
- Data is read from/written via a 2-wire serial interface (open drain I/O lines)
- Applications include thermostatic controls, industrial systems, consumer products, thermometers, or any thermal sensitive system
- 8-pin DIP or SO package (150mil and 208mil)

PIN ASSIGNMENT

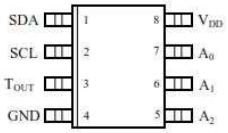

DS1621S 8-PIN SO (150mil)
DS1621V 8-PIN SO (208mil)
See Mech Drawings Section

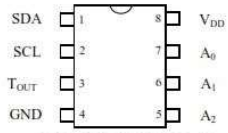

DS1621 8-PIN DIP (300mil)
See Mech Drawings Section

PIN DESCRIPTION
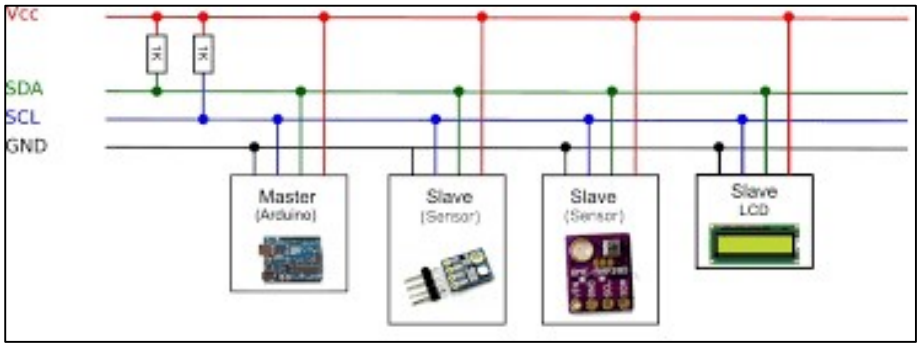
SDA	- 2-Wire Serial Data Input/Output
SCL	- 2-Wire Serial Clock
GND	- Ground
T_{OUT}	- Thermostat Output Signal
A0	- Chip Address Input
A1	- Chip Address Input
A2	- Chip Address Input
V_{DD}	- Power Supply Voltage